_

ELA AVIACIÓN, S.L.

POLIGONO INDUSTRIAL EL BLANQUILLO, M7 P26
14290 FUENTE OBEJUNA. CÓRDOBA. ESPAÑA
Telf: 0034 957 58 51 75 Fax: 0034 957 58 50 37
Email: ela@elaaviacion.com . Web: www.elaaviacion.com

MAINTENANCE MANUAL

SERIAL NUMBER MANUAL: M07-03	
AUTOGYRO: ELA 07S R-115	
CLIENT: LS Aviation Co. Ttd	
SERIAL Nº: 05113330724	**ENGINE Nº: 6774173**

ISSUE 3 (08, September 2009)

INTRODUCTION

Before flying your autogyro, you must read this guide, the flight manual and the engine operator's handbook carefully. Full knowledge of the autogyro, its features and limitations will enable you to operate it with greater safety.

The simplicity and robustness of the **ELA-07** autogyro makes maintenance operations extremely easy.

The information contained in this guide is based on the available data at the time of publication, and any modifications that could be made will be included in the form of Service Bulletins.

This guide describes the correct maintenance of all the parts manufactured by **ELA Aviación S.L.** For more detailed information on each individual component please refer to the guide of the component manufacturer.

CONTENTS AND CHECKLIST OF PAGES.

		Pag
1	Amendments to the schedule.	4
2	Foreword.	4
3	Owner operator responsibilities.	4
4	Service information.	4
5	Modifications.	5
6	Pilot's pre-flight check.	5
7	Description.	5
8	Table of characteristics.	6
9	Scheduled maintenance worksheet.	8
10	Airframe.	10
11	Steering system.	11
12	Rotor control system.	12
13	Rotor head	12
14	Rotor blades	13
15	Pre-rotator system.	14
16	Brakes and landing gear.	15
17	Trim/Rotor brake.	16
18	Fuel system.	16
19	Electrical system.	17
20	Power plant.	17
21	Oil and cooling system.	17
22	Propeller.	18
23	Assembly the rotor.	21

1. AMENDMENTS TO THE SCHEDULE.

1. Where & when necessary ELA Aviación S.L. will issue updates to this maintenance standard, and will notify known owners in the form of replacement pages with changes appropriately identified.
2. Aircraft operators are responsible for ensuring that amendments to their publication are carried out immediately and in accordance with instructions contained in amendment communication letters.

2. FOREWORD.

1. Applicability.
   This Schedule is intended to be used only for the ELA 07/07S gyroplane.
2. Guidance.
   This aircraft must be flown & operated under a permit to fly/flight license.
3. Notes
   ELA Aviación S.L provides this maintenance schedule so that, with the best possible knowledge, the operator is able to maintain the aircraft in a manner that will preserve its airworthiness. The manufacturer is unable to foresee all operating conditions. Therefore it is the operator's ongoing responsibility to assess the schedule for applicability to the environment operated within.
   NOTE: check your Permit to Fly – if compliance to this schedule is stated as required, then non-compliance will invalidate the Permit to Fly.

3. OWNER OPERATOR RESPONSIBILITIES.

Operators are responsible for the accomplishment of the maintenance prescribed in the schedule.

4. SERVICE INFORMATION.

Service information (Service Bulletins, Service Letters, etc) published by ELA should be formally technically assessed by the Owner/Operator and adopted if required to ensure operational safety and reliability, compliance with service information.

5. MODIFICATIONS.

Approved modifications which have been carried out to the gyroplane, engine, components and radio after original manufacture, must be recorded in the appropriate log book(s).
Any recurring inspection or maintenance task resulting from approved modifications should be recorded.

6. PILOT'S PRE-FLIGHT CHECK.

Pre-flight checks will be carried out in accordance with the gyroplane Operator's Handbook.

7. DESCRIPTION:

The **ELA-07** is a two-seater tandem-configured autogyro with double controls that is appropriate for giving flight instruction and perfectly suitable for certain jobs that require air transportation, such as forestry surveillance, electric pylon inspections, livestock surveillance, photography, filming, fumigation and many other applications that do not require stationary flying. Its manoeuvring capacity is extremely high and since it is impossible for the autogyro to stall or enter a spin, it has unequalled safety in flight, and when taking off and landing, thanks to the fact that it is flown at a very low speed.

8. TABLE OF CHARACTERISTICS.

GENERAL	
Type of aircraft	Autogyro
Number of seats	2
Configuration	Tandem
GENERAL DIMENSIONS	
Length	5.07 m
Careenage width	0.75 m
Full height	2.75 m
LANDING GEAR	
Material	Glass fibre
ROTOR	
Material	Carbon and glass fibre and aluminium
Diameter	27”
MAXIMUM CERTIFIED WEIGHTS	
Maximum weight on take-off	450 Kg.
Empty weight	254 - 264 Kg.
Useful load	200 - 190 Kg.
Wing load	8.12 Kg./sq m
Weight/power ratio (914 UL)	3.9 Kg./Hp.
Power/weight ratio (912 ULS)	4.5 Kg./Hp.
ENGINE	
Model	Rotax 912 ULS and 914 UL
Cycle, Nº of cylinders	4-cycle, 4-cylinder
Configuration	Boxer
Maximum power	100 and 115 HP at 5800 RPM.
Reducer	Mechanical 1: 2,4286
PROPELLER	
Make	DUC
Configuration	Three-blade
Material	Carbon fibre
Pitch	Adjustable

9. SCHEDULED MAINTENANCE WORKSHEET.

ELA 07 GYROPLANE GENERAL MAINTENANCE PLAN				
TASK Nº	TASK DESCRIPTION	FIRST 25 H	TASK INTERVAL	COMMENTS
	AIRFRAME		100 HRS ANNUAL	
1	Inspect welds especially at the bottom of the mast and engine supports.	X	X	
2	Inspect frame for damage, twisting, buckling or other deformation.		X	
3	Check the sealing or tightening of mast bolts.	X	X	M-6 bolts: 11 N/m. M-8 bolts: 25 N/m.
4	Inspect tightening of cockpit bolts.	X	X	M-6 bolts: 11 N/m.
5	Inspect tightening of seat belts bolts.	X	X	M-6 bolts: 11 N/m. M-10 bolts: 53 N/m.
6	Inspect front wheel fork straight and free operation.		X	
7	Verify landing gear in good condition.	X	X	
8	Check landing gear attachment bolts.	X	X	M-10: 53 N/m.
9	Check landing gear attachment bolts.	X	X	M-10: 53 N/m.
10	Inspect wheels for smooth operation		X	
11	Clean and grease main wheel bearings		300 hours	Grease with Molycote BR2 Plus or equivalent.
12	Inspect brake pads for wear. Replace when needed.		X	
13	Inspect brake disc for wear. Replace when needed.		X	
14	Change brake fluid.		3 years.	
	STEERING SYSTEM			
15	Inspect rudder cable and pulleys.		X	
16	Check rudder cable tension.	X	X	Tight up to 40 +/- 5 pounds.
17	Verify rudder offset to the right. Verify rudder cable retainers OK.	X	X	90 cm from rudder to right winglet with front wheel straight.
18	Verify tail and rudder in good conditions.	X	X	
19	Check tightening of tail unit bolts	X	X	M-6 bolts: 11 N/m.
20	Grease with spray the upper rudder pin.		X	Spray Kraft “Chain grease” or equivalent.

TASK Nº	TASK DESCRIPTION	FIRST 25 H	TASK INTERVAL	COMMENTS
	ROTOR CONTROLS		**100 HRS ANNUAL**	
21	Inspect all control rods straight, no cracks, bearings free and no play.		X	
22	Grease rod ends.		X	Use Molycote BR2 Plus or equivalent.
23	Verify red marks sealing of all bolts.	X	X	
24	Re-tight bolts of control fork behind the rear seat and mark with red paint.	X	X	M-6: 11 N/m.
	THROTTLE AND CHOKE SYSTEMS			
25	Read engine Operator's Handbook.			
26	Grease throttle levers.		X	Spray Kraft "Chain grease" or equivalent.
27	Adjust throttle levers friction		X	
28	Verify throttle and choke cables		X	
29	Check carburettors balance.		X	
	ROTOR HEAD			
30	Inspect the whole rotor head for s cracks or twisting.	X	X	
31	Grease rotor head bushes via nipple.		X	Use Molycote BR2 Plus or equivalent.
32	Inspect the whole rotor head for cracks or twisting.	X	X	
33	Inspect brake pad for wear. Replace when needed.		X	
34	Inspect trim/brake cylinder condition. Grease with spray.		X	Spray Kraft "Chain grease" or equivalent.
35	Send the whole rotor head for general inspection to an authorized centre.		1000 hours.	
	ROTOR BLADES			
36	Verify rotor blades and hub bar are in perfect condition with no deformities, cracks and leading edge with no scratches.		X	
37	Clean and grease teeter bolt bearings.		300 hours	Molycote BR2 Plus or equivalent.
38	Verify teeter bolt tightened.		300 hours	Tight up to 25 N/m and slack ¼ turn. Fit split pin.
39	Verify rotor blade bolts are tightened.		X	M-10: 53 N/m.
	ELECTRICAL SYSTEM AND INSTRUMENTS			
	Inspect battery level. Re-fill with distilled water.		1 year.	
40	Inspect intrument panel main connector at the right side of the front seat.		X	
41	Inspect the wiring harness and connections.		X	

TASK Nº	TASK DESCRIPTION	FIRST 25 H	TASK INTERVAL	COMMENTS
	TRIM/ROTOR BRAKE SYSTEM		**100 HRS ANNUAL**	
42	Inspect pneumatic harness for damage.		X	
43	Verify compressor condition.		X	Listen noise during operation.
44	Change o-rings of rotor head air piston when needed.			
	FUEL SYSTEM			
45	Read engine Operator's Handbook.			
46	Open and clean gascolator.		X	
47	Replace fuel filter.		X	
48	Fuel tank strainer test.		200 Hours.	
49	Inspect fuel cap.		X	
50	Inspect fuel tanks breathers.		X	
51	Inspect fuel hoses for cracks or deterioration.		X	
52	Replace fuel hoses		300 Hours or 3 years.	
	COOLING SYSTEM			
53	Read engine Operator's Handbook.			
54	Verify brackets, silent-blocks and water cooler condition.		X	Change water cooler silent-blocks when needed.
55	Inspect the pipes and rubber hoses.		X	
56	Replace rubber hoses.		300 Hours or 3 years.	
57	Change antifreeze.		300 Hours or 3 years.	50% glycol, 50% water.
58	Check expansion tank cap (black).		X	
	OIL SYSTEM			
59	Read engine Operator's Handbook.			
60	Verify oil cooler condition.		X	
61	Verify oil tank brackets.		X	
62	Inspect oil hoses for cracks or damage.		X	

TASK Nº	TASK DESCRIPTION	FIRST 25 H	TASK INTERVAL	COMMENTS
	PREROTATOR		**100 HRS ANNUAL**	
63	Inspect transmissions for bend or damage.		X	
64	Inspect universal joints for wear or play and grease the slider gaiters with spray grease		X	Spray Kraft "Chain grease" or equivalent.

65	Inspect prerotator belt for splits or wear.		X	
66	Inspect the prerotator cable Bowden.		X	
67	Adjust the prerotator lever position and grease with spray.		X	Spray Kraft “Chain grease” or equivalent.
68	Replace prerotator belt.		200 Hours.	Replace before if prerotator loose power.
69	Inspect and grease ring gear on the rotor head.		X	Use Brugarolas JET-70 or equivalent. Grease water resistant.
70	Inspect bendix pinion on the rotor head, replace when needed.		X	
71	Grease the bendix bearing on the top.		X	Spray Kraft “Chain grease” or equivalent.
72	Grease inside of the body of the bendix.		X	Use WD-40. Don’t use grease!
73	Change the oil of the right angle gear unit		200 Hours.	
	PROPELLER			
74	Check propeller blades and hub condition.	X	X	
75	Check propeller pitch.	X	X	14º for 912S. 16º for 914 Turbo.
76	Check propeller bolts tightened.	X	X	M-8 bolts: 25 N/m.
	OTHER			
77	Verify all placards are readable		X	

10. AIRFRAME

- The principal structure of the autogyro is made of TIG welded stainless steel tube which guarantees the absence of corrosion in the entire structure, without having to worry about the problems that this could cause inside the tubes.

- It is very important to ensure the whole structure is kept free from dust and grease in order to carry out the inspections with total guarantee.

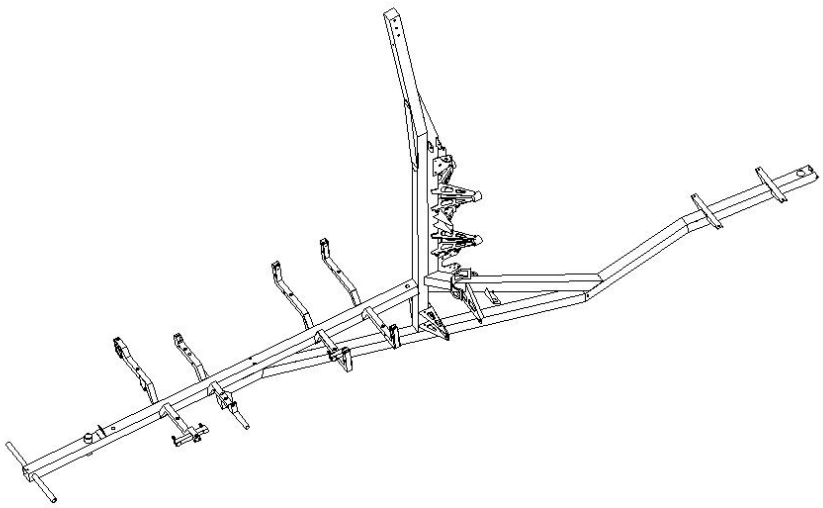

11. STEERING SYSTEM:

- The steering system controls the front wheel, permitting the autogyro to be piloted on the ground by pressing on the pedals from both pilot seats and the same pedals activate the steering shaft for flight control, and take-off and landing procedures.

- IMPORTANT! The tension of the control rudder cable should be checked (40 +/-5 pounds), and tightened by the turnbuckle situated inside the cockpit. Then adjust the rudder position correctly with the front wheel straight. (90 cm).

- In case of any detected defect in the control cable, however slight it is that cable must be replaced immediately.

- The correct status of the angular change pulleys of the cables must also be checked. These pulleys must be replaced if worn and the sealing or tightening of the elements that anchor the tail unit to the structure must also be checked.

- The general status of the tail unit must be inspected to check for fissures in its structure and the upper king pin of the rudder greased.

12. ROTOR CONTROL SYSTEM:

The rotor control system is entirely made of stainless steel and mounted on stainless steel bearings and rod ends. The control columns are fixed at their lower ends to a torque bar that pivots on two bearings anchored to the main structure, joined at the top to a push-pull bar, which together with the former controls the rotor control element. Two vertical bars emerge from this point that stop at two return devices, one at each side of the structure.

- The whole system must be cleaned to remove traces of grease, and the rod ends re-greased. An inspection should also be made to check for deformities or cracks in the whole system, and verify the proper sealing or/and tightening of all 11 N/m screws.

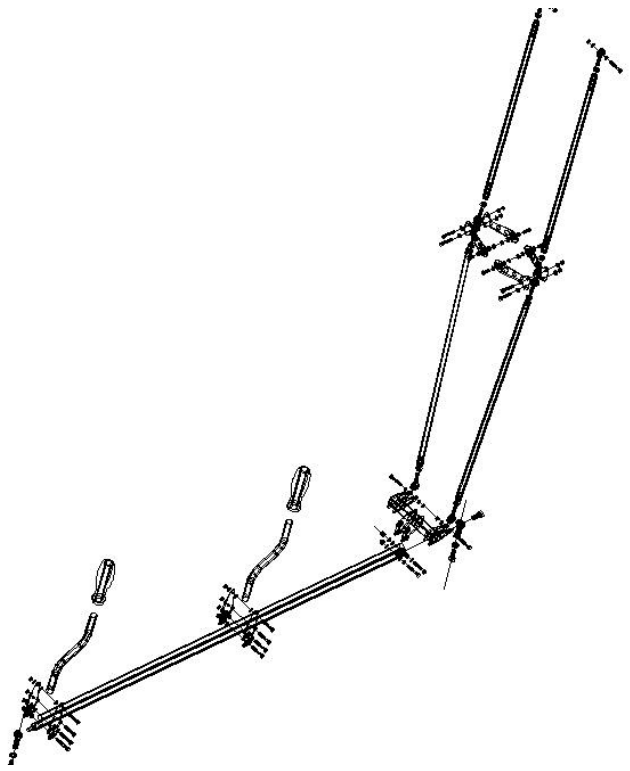

13. ROTOR HEAD:

- Rotor head is made of stainless steel and duraluminium, and highly-resistant machined steel parts have also been used in some of its components. The rotor joints are mounted on bronze bushings and bolts made of high-resistant steel; the limit adjustments are fixed in construction and do not require any calibration. Rotor head turns on a double angular contact bearing, and the hub bar is articulated with conical roller bearings. The rotor head itself houses the prerotator bendix, brake-trim system and rotor rpm counter sensor.

- The whole rotor system must be cleaned to remove traces of grease, check for possible deformities or fissures in the welding and fittings, check the sealing or tightening of all the

system screws, check the status of the rotor brake, grease the rotor block via the greaser, as well as the prerotator ring gear, bendix and the needle bearing of the bendix axle.

- Rotor head must be dismantled every 1000 hours from the anchoring plate to the mast and sent to an authorised centre or to the manufacturer for a complete overhaul.

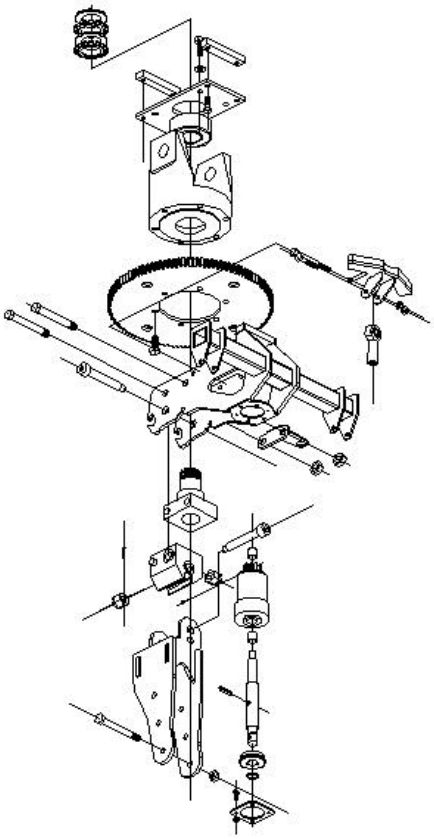

14. ROTOR BLADES:

- Rotor blades are made of different materials such as duraluminium and glass and carbon fibre, and are mounted on a mechanised hub bar that has alignment and tracking adjustment.

- Rotor blades are perfectly aligned and balanced in the factory, and must be mounted in accordance with the reference marks in the event of dismantling them. Some tracking adjustment may have to be made over time in the event that abnormal vibrations are observed in the lever or in the autogyro structure.

- If due to any abnormal circumstance any of the blades touch the ground or collide with a heavy object, all flights must be immediately cancelled until the scope of the damage has

been completely determined in the rotor blades, hub bar or structure; if necessary, any components that give rise to doubt must be sent to the manufacturer.

- The hub bar bearings must be cleaned and greased.

- Every 1000 hours, the blades and hub bar must be dismantled and sent to an authorised centre or to the manufacturer, for a general overhaul.

- The blades must be protected with covers to prevent accumulations of dirt, water condensation and possible knocks.

- The teeter bolt must be tighted at 25N/m ± and slack ¼ of turn to put the safety pin, so important.

15. PRE-ROTATOR SYSTEM:

- Prerotator system is optimised to enable very short take-off runs, and the mechanism in question can supply the rotor with up to a maximum of 300 RPM.

- The mechanism consists of three different parts; first one in order of transmission is the clutch, formed by two pulleys, which is activated by a lever on the left that tautens a belt, transmitting movement to an angular device through a transmission unit mounted on two cardan joints. The angular device diverts the gyro vertically and transmits the movement to a bendix that is interlocked with the ring gear of the rotor head through another transmission unit.

- The whole system must be cleaned to remove traces of grease and then re-greased, and grease sprayed on the grooved axles of the transmission units and on the tilt bearing of the prerotator pulley. The status of the belt must be checked and the activation of the prerotator tensor equipment checked, in addition to the screws of the entire system.

- The pinion of the bendix should be checked.

- The rubber dust covers must be removed from the cardan joints for re-greasing.

- The prerotator cable Bowden should be adjusted as the following photo:

With the parking brakes ON, throttle in idle position pulling the prerotator lever the distance should be 12 cm.

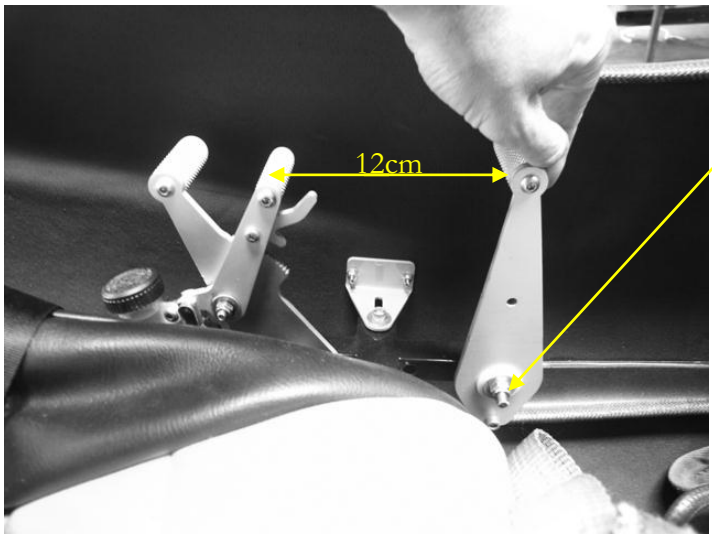

Friction nut.

16. BRAKES AND LANDING GEAR.

- Landing gear is constructed in the shape of a cross-bow using glass fibre and epoxy resin material. The wheel calipers and brakes system are installed on it.

- The sealing or tightening of the cross-bow structure fastening screws and wheel calipers must be checked and an inspection made to verify whether any fissures or deformities exist in the same.

- The status of the tyres must be checked and the brake linings inspected to check they are not worn, and the material replaced if necessary. Also check for possible erosions of the hydraulic installation, and the brake fluid level.

- Tyres pressure should be checked every 100 Hours.

  Front wheel → 1,5 Bar.
  Main wheels → 2 Bar.

- Wheels must be dismantled from their axle boxes, and the whole unit cleaned and greased, and the brake disk inspected.

- Brake fluid must be changed every 3 years.
- Brake lever and ratchet pawl must be checked or replace as necessary.

17. TRIM/ROTOR BRAKE:

- Rotor trim and brake are both activated pneumatically. The system consists of a pneumatic compressor, a set of valves that enable the automatism to be selected in two positions (rotor brake or compensator during flight), a dual-action pneumatic cylinder that controls both manoeuvres, a two-position switch that activates the compensator and the rotor brake and a pressure gauge to indicate the compensator value and the rotor brake applied.

- The pneumatic system should be checked to prevent leaks.

- The pneumatic cylinder has to be lubricated.

18. FUEL SYSTEM:

- The fuel tank is made of composite materials and has 75 litres of capacity. A line runs from the tank to the engine which houses a filtering and decanting system and two fuel pumps mounted parallel to each other (914), with separate electrical circuits and checking systems. Along the line towards the engine is a pressure limiting device that has an output for excess fuel, leading to the tank. The fuel level control is done by a gauge device on the right side of the tank that activates a measuring instrument in the cockpit. Filling is done through the front part of the tank.

- The gascolator body must be dismantled to clean the mesh filter and empty the contents, and to check for the presence of water. A check must also be made for possible damage to the fuel line, fuel cap and the filter changed.
- The fuel tank strainer should be tested every 200 flight hours like the following procedure:

1º Fill the fuel tank totally up to the fuel cap with gasoline.
2º Remove the hose from the fuel outlet in the tank.
3º With a calibrated container, measure the time to get one liter.

Time with clean filter: 30 seconds.
Maximum allowed time: 40 seconds.

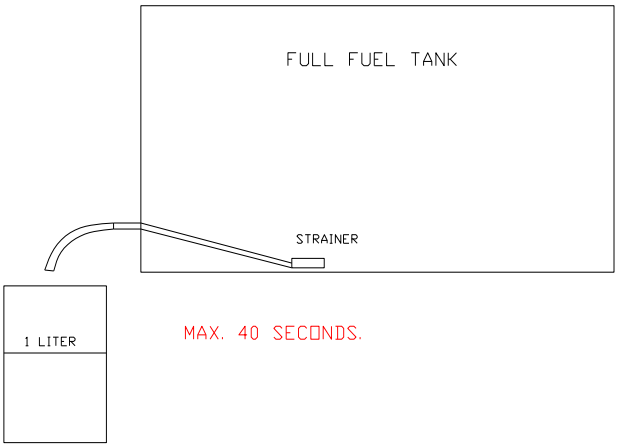

19. ELECTRICAL SYSTEM:

- Electrical system is a modular unit with elements that can be interchanged by just disconnecting and connecting another instrument panel or an electrical harness. The system is totally protected by rearmable circuit breakers and has an extra line with 5Am protection for accessories such as an intercom radio or gps.

- The level of the battery electrolyte must be checked and the terminal screws cleaned and protected with grease, if necessary.

- Flight instruments must be calibrated.

- A check must be made to ensure the terminals connected to mass are well tightened and dielectric spray must be applied to all the terminals.

20. POWER PLANT:

- As indicated in table nº 1, the engine installed is a 100 HP Rotax 912 ULS or 115 HP Rotax 914 UL. For the engine maintenance, follow the instructions of the manufacturer's guide. However, this section describes the maintenance works to be performed on the different accessories mounted near the engine.

- General rule. It is very important to keep the autogyro scrupulously clean, and in particular, the engine requires special care so that any anomaly can be easily detected.

- Water and oil cooling system must be checked for cracks in the rubber pipes and leakages of fluid in both circuits. The status of the water and oil radiator supports should also be checked and the clamps of the rubber sleeves. Water and oil levels must be checked every flight day. During the inspection, also check for possible damage to the electrical system cables and fuel installation.

21. OIL AND COOLING SYSTEM.

- For engine maintenance refer to engine's manufacturer handbook.

- The oil and cooling system are formed by two radiators, oil and coolant tanks and pipes. Engine pump forces the cooling liquid through the radiator inside a pressurised circuit. The coolant and oil level must be checked every flight day.

- Verify the correct status of the radiators and pipes.

- The water radiator silentblocks must be inspected and replace if needed.

- The cooling liquid must be replaced. It is formed by 50 % distilled water and 50 % glycol.

22. PROPELLER.

The Duc propeller is fitted as standard. This is a 3 bladed composite design with composite hub. Check pitch and bolts torque (25N/m).

- 14º for 912 S.
- 16º for 914 UL.

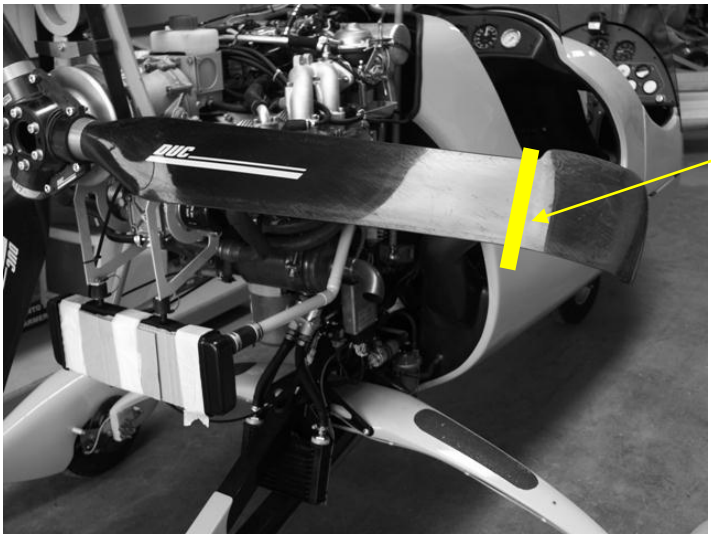

23. ASSEMBLY THE ROTOR.

Follow these instructions for the correct mounting of the rotor blades.

The rotor comprises of three basic parts: Its two blades and the blade-supporting hub bar.
Set the blades on stands or tables.

Insert the blade-supporting hub bar in one of them.
The red marks must be aligned. IMPORTANT.

Insert the main bolt completely in.

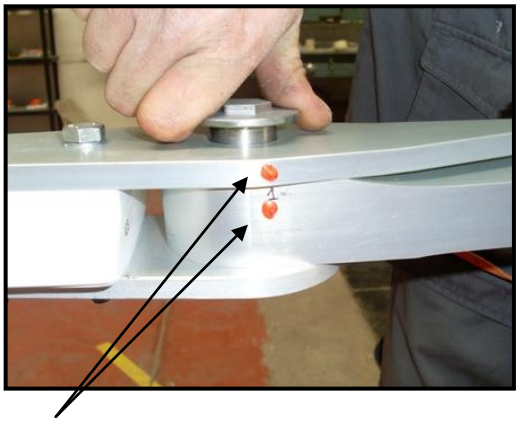

Red marks.

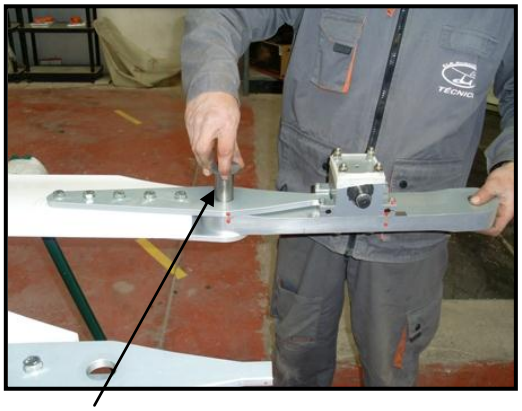

Main bolt.

Aided by another person, hold the other blade to insert it in the other end of the hub bar.
Keep the angle between the two blades as shown in the photograph.
Insert the bolt completely in before releasing the blade end.

Insert the blade in the other hub bar end keeping the angle shown in the photograph.

Without releasing the blade end, insert the main bolt completely in.
The hub bar will remain in this way:

Tighten to 100-120N/m the main bolt and bend the safety extension of the washer where it coincides. IMPORTANT

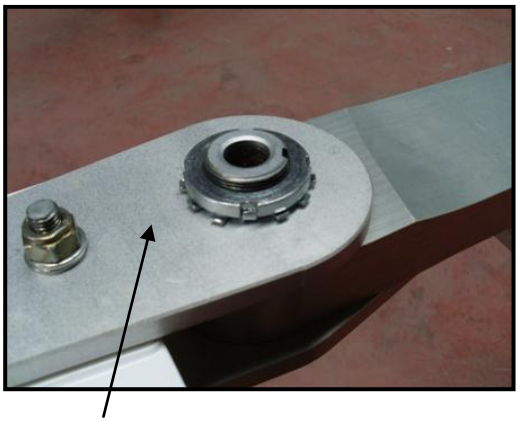

Bend the extension of the washer where it coincides.

Tighten the M-6 vertical screw (only those that are not sealed with red paint) to 4N/m.
Bring closer the grub screw that holds the blade in dragging with 5N/m.

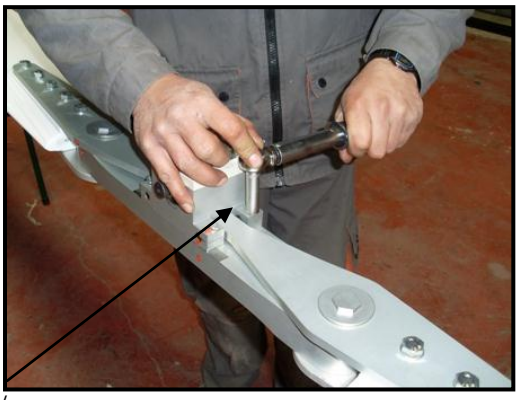

4N/m.

5N/m.

Tighten the M-6 vertical screw once again to 11N/m.

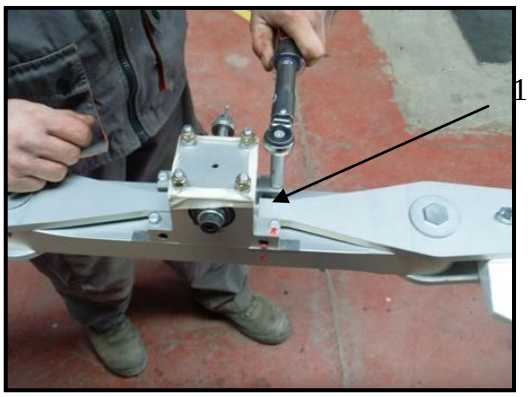

Mount the rotor in the correct position on the autogyro, in such a way that the hub bar´s red mark is aligned with the one on the rotor head.

Tighten the 12 mm central screw keeping the order of the washers.
The tightening procedure is as follows: Tighten the screw to 25N/m and loosen it ¼ a turn to place the safety cotter pin. IMPORTANT.